REV.	DATE	ECN.NO	MODIFY.CONTENT
A0	2020.07.08		新版发行

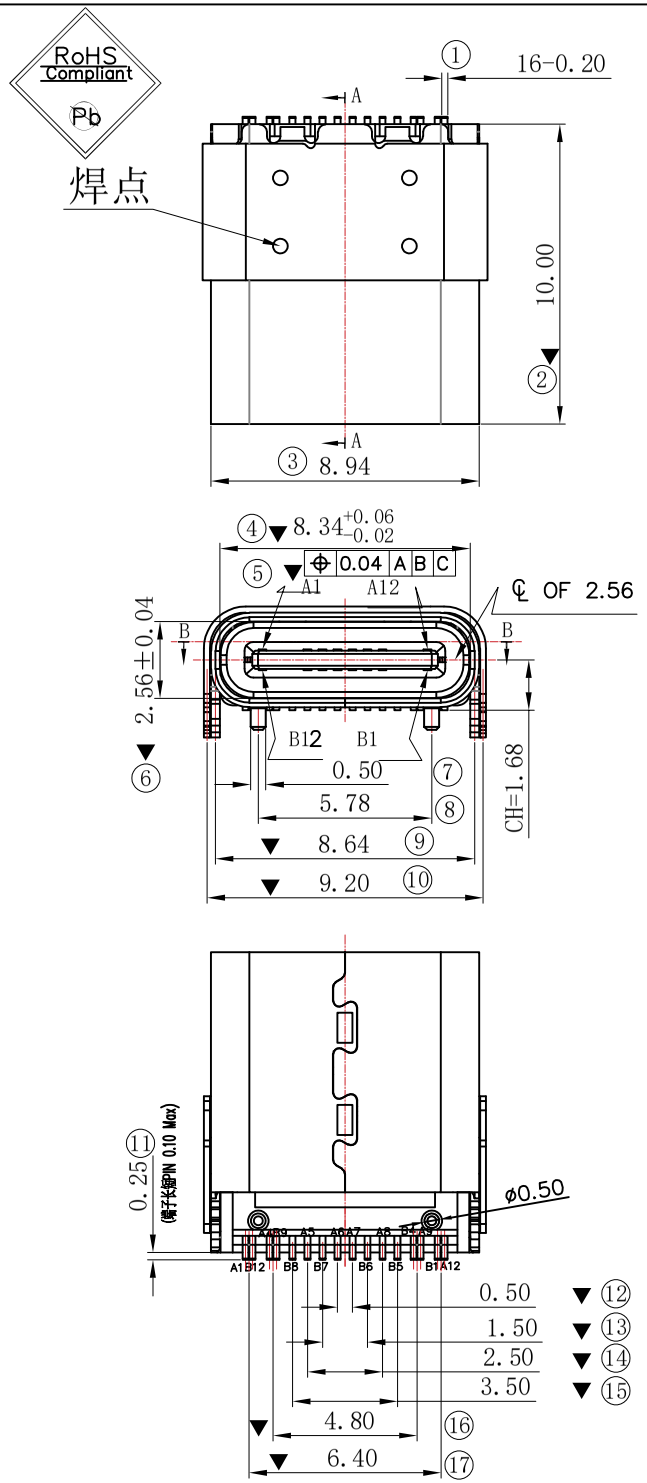

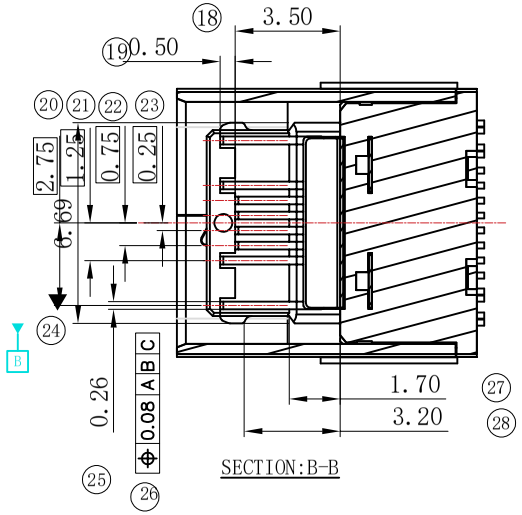

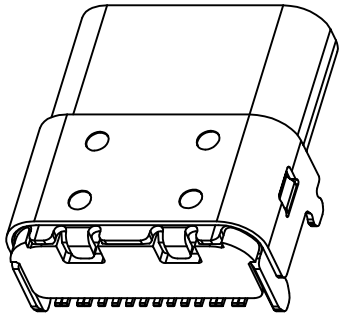

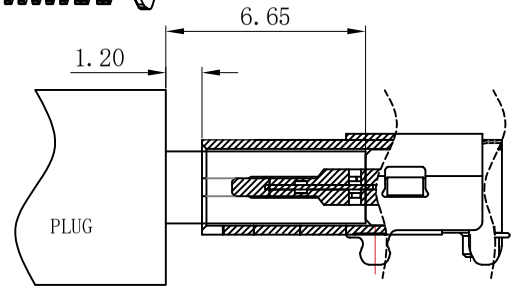

AFTER MATING

料号备注：
C-TF107-LH37XXY-00

"00"素材
"01"镀金G/F
"02"镀金3U"
"03"镀金5U"
"04"镀金15U"
"05"镀金30U"
"06"半金锡G/F
"09"半金锡15U"
"10"半金锡30U"

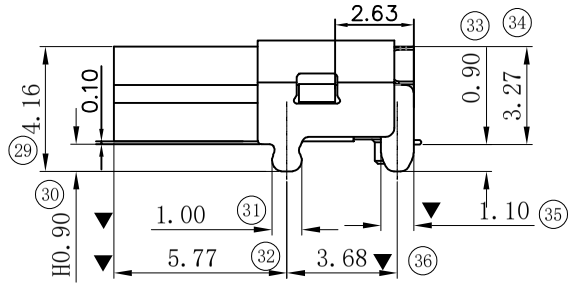

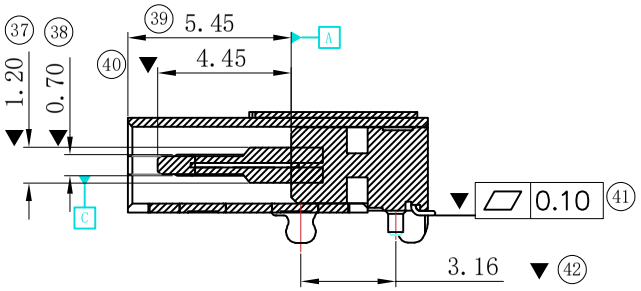

USB TYPE-C PIN ASSIGNMENTS

PIN NUMBER	SIGNAL NAME
A1	GND
A4	VBUS
A5	CC1
A6	Dp1
A7	Dn1
A8	SBU1
A9	VBUS
A12	GND

PIN NUMBER	SIGNAL NAME
B12	GND
B9	VBUS
B8	SBU2
B7	Dn2
B6	Dp2
B5	CC2
B4	VBUS
B1	GND

TOLERANCE:		UNIT	深圳市同心富精密电子有限公司 Shenzhen TXF Precision Electronics Co.,LTD			
X. ±0.50	X.° ±1°	MM				
.X ±0.35	.X° ±1°	SHEET				
.XX ±0.25	.XX° ±1.0°	1/7	DRAW:	Andy	2020.07.08	P/N: C-TF107-LH37XXY-00
.XXX ±0.10		SCALE	DESIGN:	Andy	2020.07.08	ITEM: USB 3.1 CF 16P板上 L10脚 长H0.9MM避光款
		1:1	CHECK:	Mijo	2020.07.08	
		REV: A	APPR:			DRW NO: C16001-02